NARSIS

New Approach to Reactor Safety ImprovementS

Topic#5: Severe Accident Management

Global S&T synthesis and key outcomes from NARSIS

Luka Štrubelj, GEN energija d.o.o., Slovenija

Marko Bohanec Jožef Stefan Institute, Department of Knowledge Technologies, Ljubljana, Slovenia

Ivan Vrbanić and **Ivica Bašić**, APoSS, System Reliability and Safety Analyses, Zabok, Croatia

Klemen Debelak GEN energija, d.o.o., Krško, Slovenia

Adem Kikaj, International Postgraduate School Jožef Stefan, Ljubljana, Slovenia

NARSIS Final Workshop, February 16th & 17th 2022

Idea

- **Development of decision support tool for severe accident management in nuclear power plants that would help technical support centre during management and training.**

Goals

Provide additional information to technical support centre during severe accident:

- **Interpret time series of measurements of important physical parameters,**
- **Provide relevant information that would help to understand the state of NPP systems (status of physical barriers for radioactive material) and possible development of the accident, and**
- **Asses possible consequences of management actions in terms of likelihood of radioactive releases to environment in order to protect public and environment.**

Steps

- **Step 1: Characterization of the referential NPP,**
- **Step 2: Characterization of Severe Accident Management Guidelines and other procedures,**
- **Step 3: Definition of hazard-induced damage states and development of state-specific accident progression event trees,**
- **Step 4: Severe accident analyses,**
- **Step 5: Development of severe accident management decision support tool,**
- **Step 6: Verification & Validation of the decision support tool.**

Step 1: Characterization of the referential NPP

- **II generation NPP, represents operating NPP in EU**

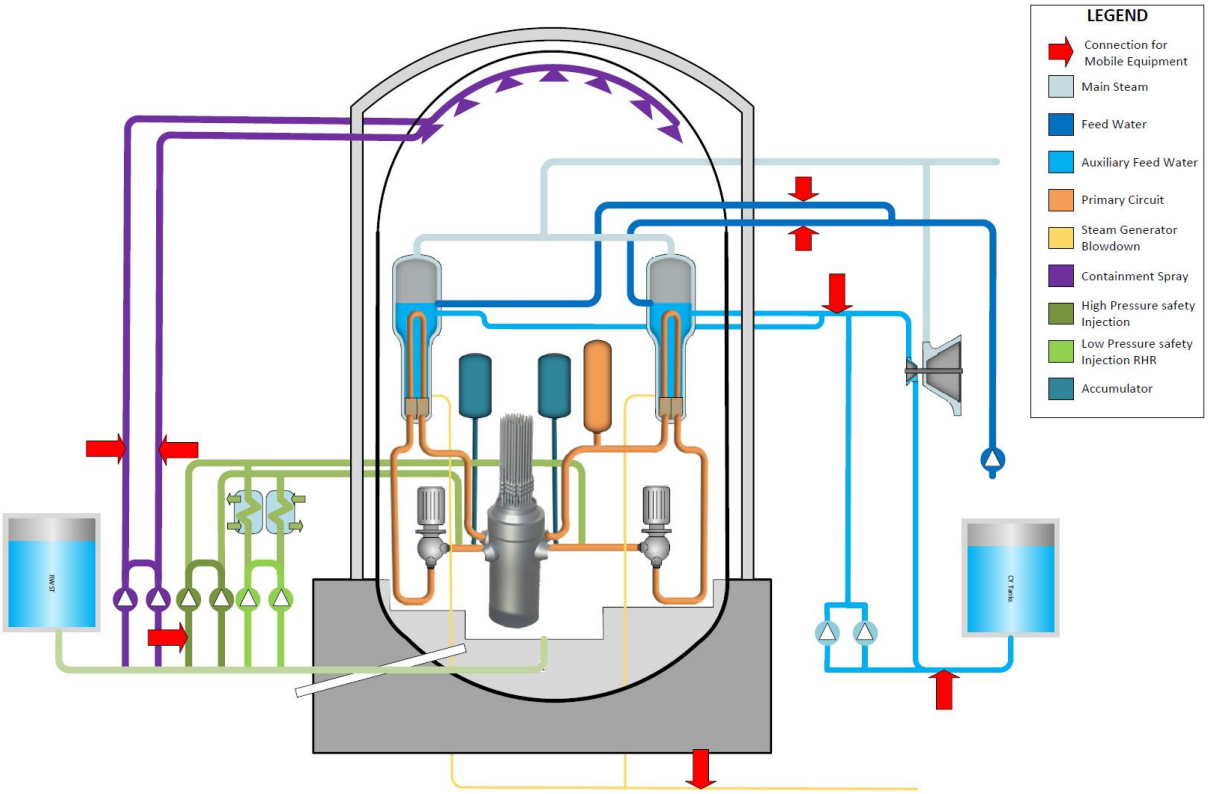

Step 2: Characterization of Severe Accident Management Guidelines

- **Symptom based severe accident management guidelines:**
  - **Mitigate fission product releases**
  - **Depressurize containment**
  - **Control hydrogen flammability**
- **Extensive damage management guidelines**
- **Emergency operating procedures**

Step 3: Definition of hazard-induced damage states

- **Definition of important parameters**
  - Core exit temperature,
  - Steam generator level,
  - Reactor pressure vessel level,
  - Reactor cooling system pressure,
  - Containment pressure,
  - Containment temperature,
  - Containment sump level, and
  - Hydrogen concentration in containment.
- **Two major type of sequences based on reactor coolant system pressure:**
  - High pressure sequences
  - Low pressure sequences
- **Identification of safety functions**
  - Reactor coolant system depressurization,
  - Low pressure emergency core cooling injection,
  - Low pressure emergency core cooling recirculation,
  - Containment spray recirculation, and
  - Containment cooling.

Step 3: Definition of hazard-induced damage states

- **Example logic model for seismically induced high pressure (HP) and low pressure (LP) sequence**

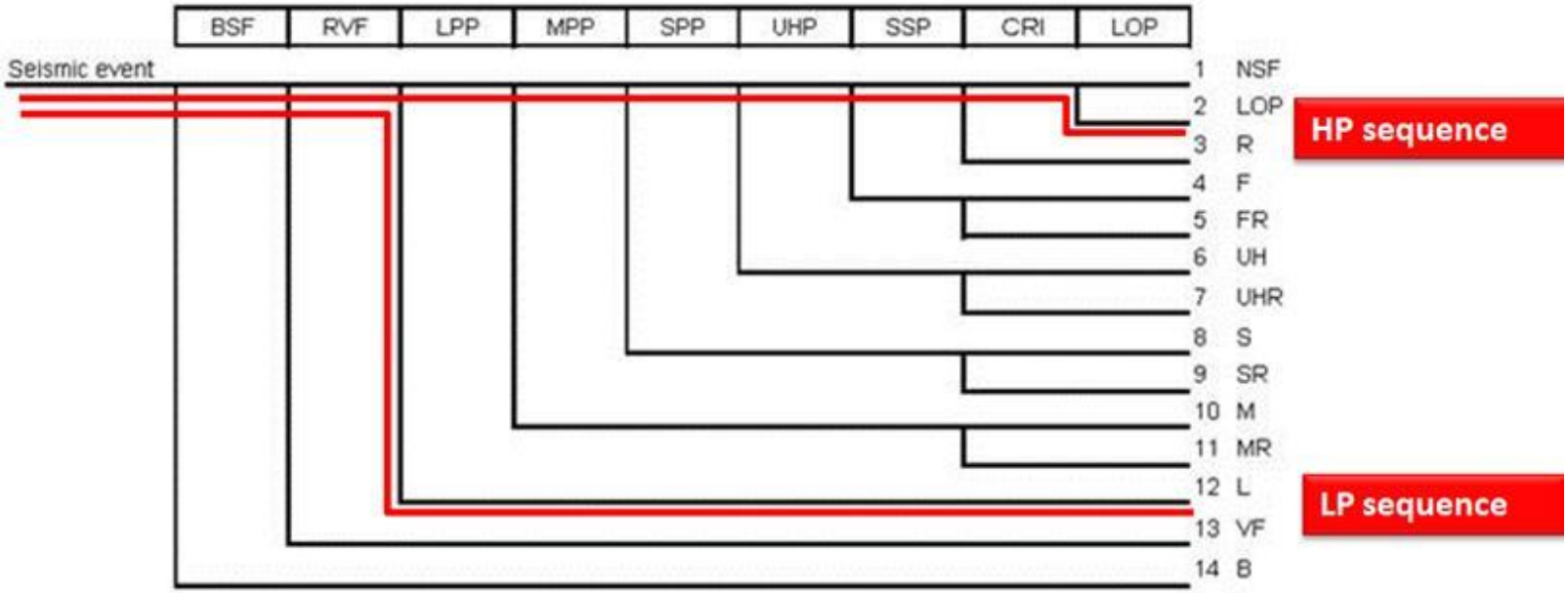

Step 4: Severe accident analyses

- **More than 25 accident sequences with different actuation time of safety equipment activation were precalculated.**

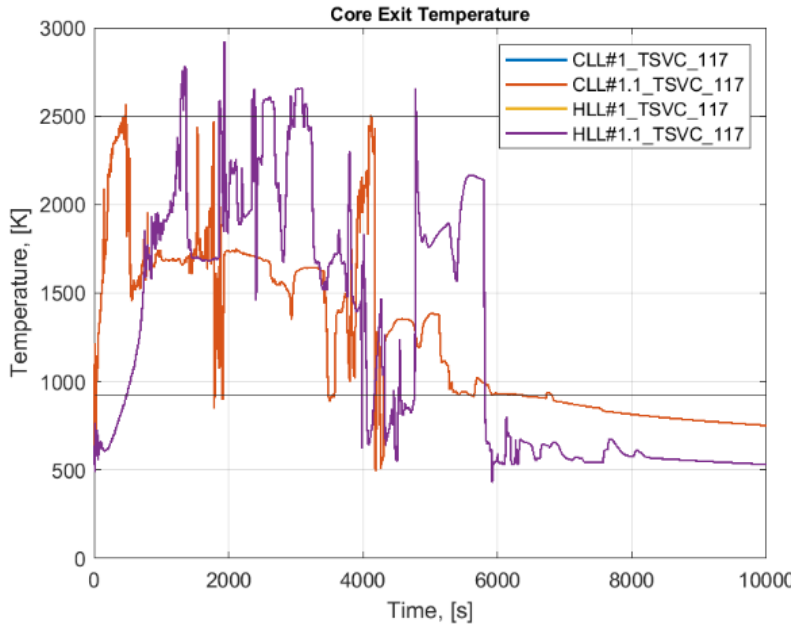

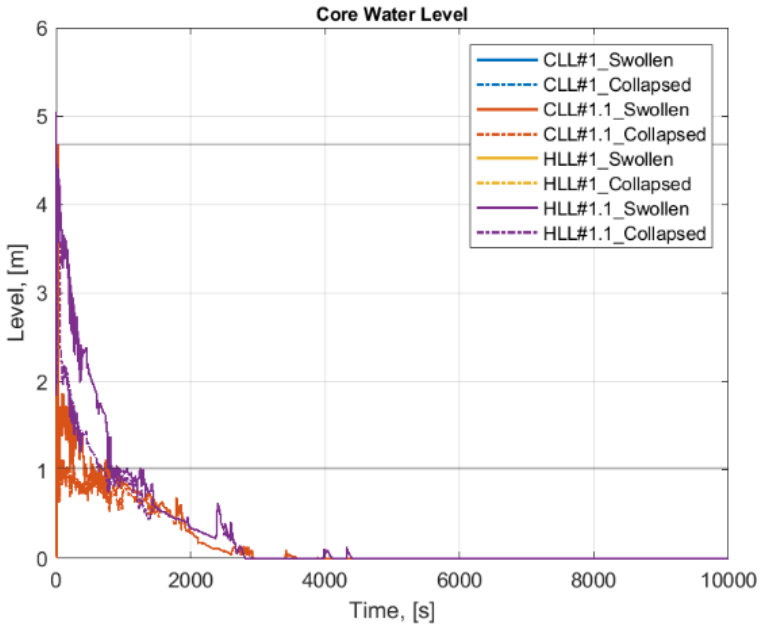

Step 5: Development of severe accident management decision support tool

➢ Demonstration tool

1. Monitor operating parameters
2. Access the state of barriers
3. Predict accident progressions
4. Identify recovery actions
5. Assess the feasibility
6. Predict consequences
7. Access actions, suggest the best
8. Implement selected action(s)

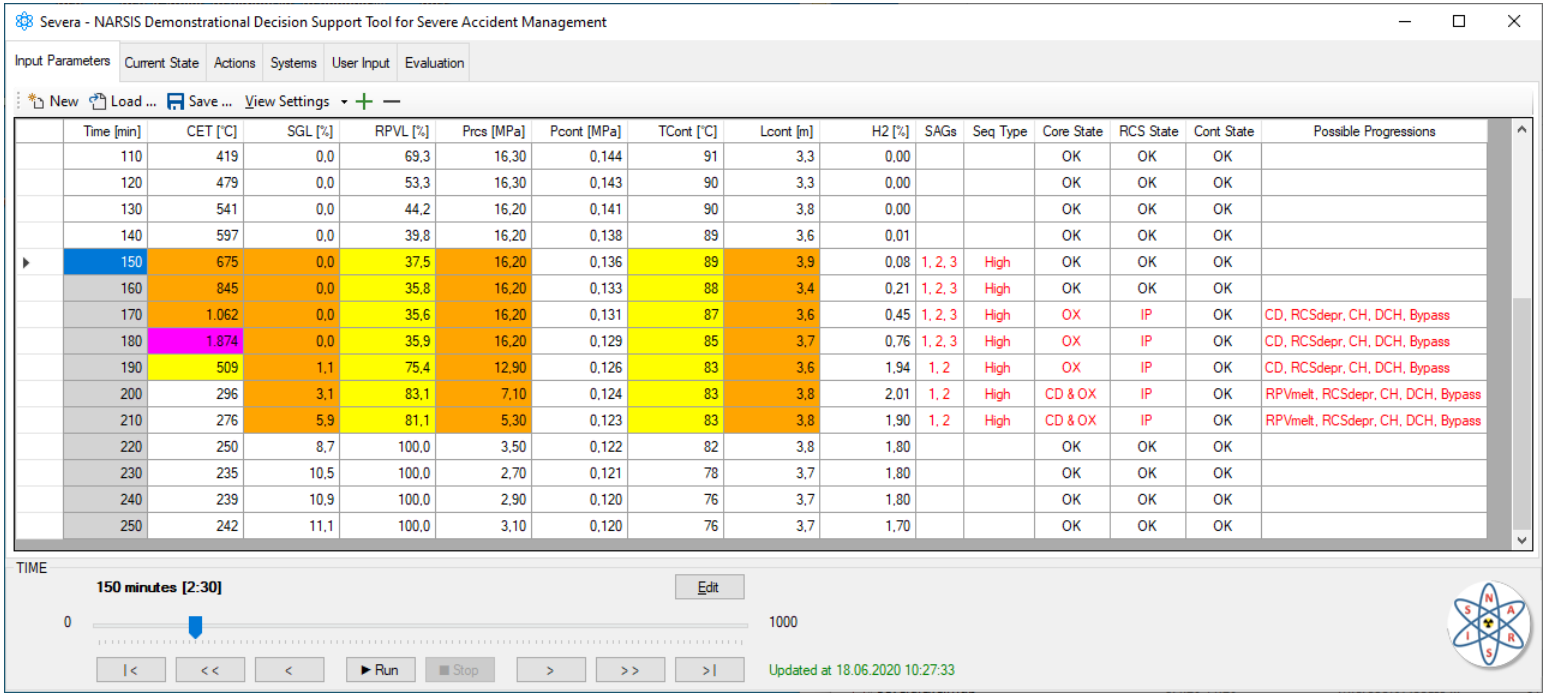

Time [min]	CET [°C]	SGL [%]	RPVL [%]	Prcs [MPa]	Pcont [MPa]	TCont [°C]	Lcont [m]	H2 [%]	SAGs	Seq Type	Core State	RCS State	Cont State	Possible Progressions
110	419	0,0	69,3	16,30	0,144	91	3,3	0,00			OK	OK	OK	
120	479	0,0	53,3	16,30	0,143	90	3,3	0,00			OK	OK	OK	
130	541	0,0	44,2	16,20	0,141	90	3,8	0,00			OK	OK	OK	
140	597	0,0	39,8	16,20	0,138	89	3,6	0,01			OK	OK	OK	
150	675	0,0	37,5	16,20	0,136	89	3,9	0,08	1, 2, 3	High	OK	OK	OK	
160	845	0,0	35,8	16,20	0,133	88	3,4	0,21	1, 2, 3	High	OK	OK	OK	
170	1.062	0,0	35,6	16,20	0,131	87	3,6	0,45	1, 2, 3	High	OX	IP	OK	CD, RCSdepr, CH, DCH, Bypass
180	1.874	0,0	35,9	16,20	0,129	85	3,7	0,76	1, 2, 3	High	OX	IP	OK	CD, RCSdepr, CH, DCH, Bypass
190	509	1,1	75,4	12,90	0,126	83	3,6	1,94	1, 2	High	OX	IP	OK	CD, RCSdepr, CH, DCH, Bypass
200	296	3,1	83,1	7,10	0,124	83	3,8	2,01	1, 2	High	CD & OX	IP	OK	RPVmelt, RCSdepr, CH, DCH, Bypass
210	276	5,9	81,1	5,30	0,123	83	3,8	1,90	1, 2	High	CD & OX	IP	OK	RPVmelt, RCSdepr, CH, DCH, Bypass
220	250	8,7	100,0	3,50	0,122	82	3,8	1,80			OK	OK	OK	
230	235	10,5	100,0	2,70	0,121	78	3,7	1,80			OK	OK	OK	
240	239	10,9	100,0	2,90	0,120	76	3,7	1,80			OK	OK	OK	
250	242	11,1	100,0	3,10	0,120	76	3,7	1,70			OK	OK	OK	

Step 5: Development of severe accident management decision support tool

- **Assessment of actions**
  - **Compare probabilities for different categories of releases (early, intermediate, late, no)**

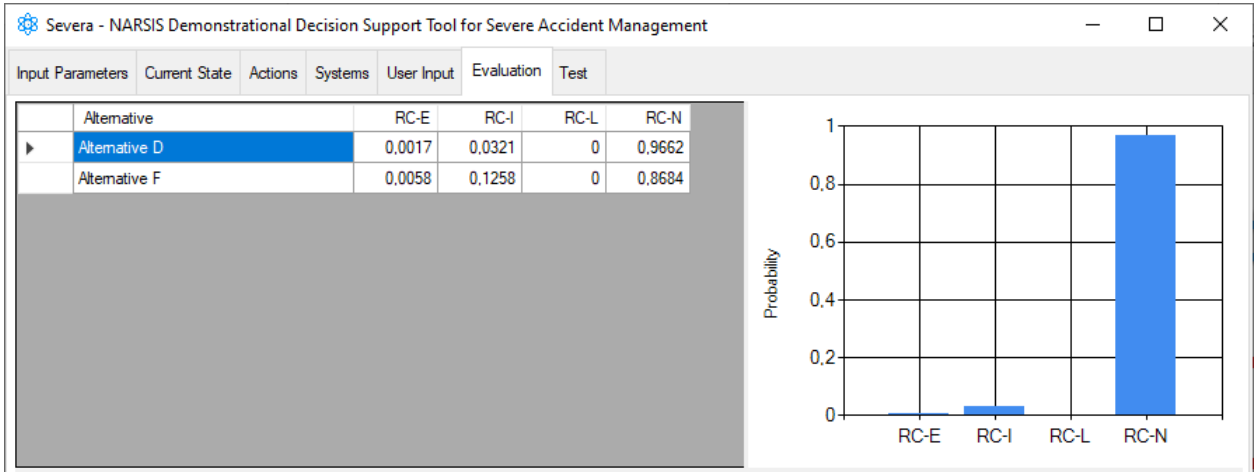

Alternative	RC-E	RC-I	RC-L	RC-N
Alternative D	0,0017	0,0321	0	0,9662
Alternative F	0,0058	0,1258	0	0,8684

Step 6: Verification & Validation of the decision support tool

- **Verification: check whether the product is in accordance with predefined specifications ("see whether you really got what you wanted");**
  - **Define test cases involving different formulas embedded in the tool;**
  - **Pre-calculate results independently (externally to Severa), e.g., by a spreadsheet;**
  - **Perform runs by Severa and compare;**

- **Validation: check whether the product is suitable for the intended purpose / application ("see whether you really wanted what you got").**
  - **Define test cases for different conditions predictable by supporting analyses or knowledge / experience;**
  - **Define the expectations with regard to results. Those were related to likelihood profile of containment failure / release categories;**
  - **Calculate the results and interpret / evaluate them against the expectations;**
  - **Do also sanity checks against other test results;**

Science & Technology synthesis and key outcomes

- **Severa decision support demonstration tool**
  - **Can be used for training of technical support centre**
  - **Can be used to manage severe accident**
    - Support technical support centre in an extremely difficult, stressful and often unclear decision situation
    - Provide timely and best available information about barriers and potential future development of accident and radioactive releases
    - Reducing the risk of inappropriate decisions
- **Incorporate variety of modelling techniques for decision support**